FUNKEN
Kunststoffanlagen

INERTIA DROPLET SEPARATOR MADE OF SYNTHETIC MATERIAL

Type TAHeco

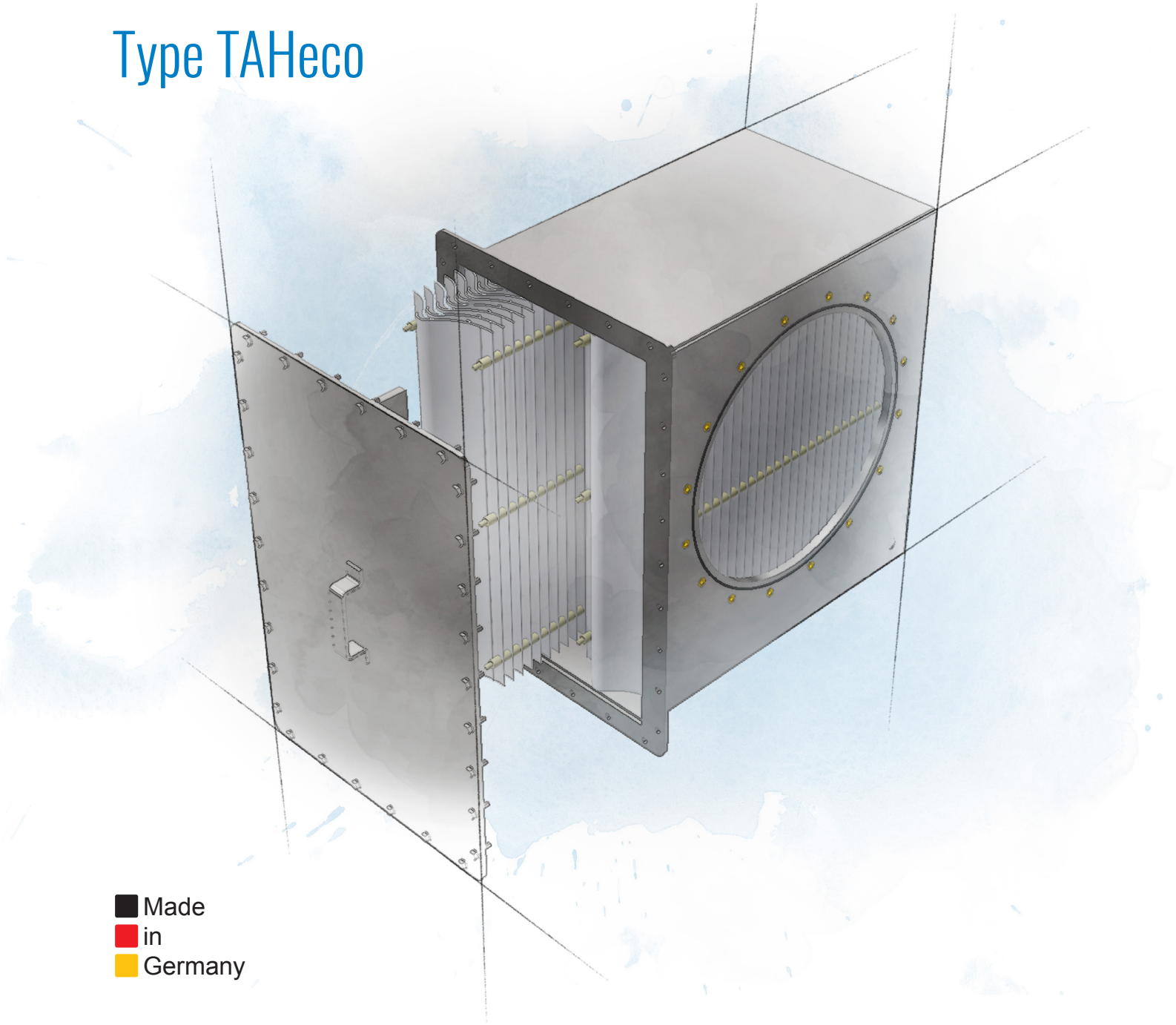

Made
in
Germany

www.funken.de EN

THE INERTIA DROPLET SEPARATOR

to remove liquid particles from the exhaust air flow

KEY FEATURES

- Good separation performance with low pressure drop
- Extremely inexpensive because of its compact design and standardization
- Corrosion resistant and durable
- Easy cleaning due to the slat packs that can be pulled out to the side
- Housing material made of PPs (flame retardant according to DIN 4102 B1), optionally electrically conductive
- Resistant against most aqueous acids and alkalis
- 22 sizes for exhaust air flows from 300 to 100.000 m³/h. Up to 80°C and +/- 2000 Pa.
- Optionally with flanged reductions to the pipe diameter of your choice
- Optionally installed with a spray nozzle in the port reducer

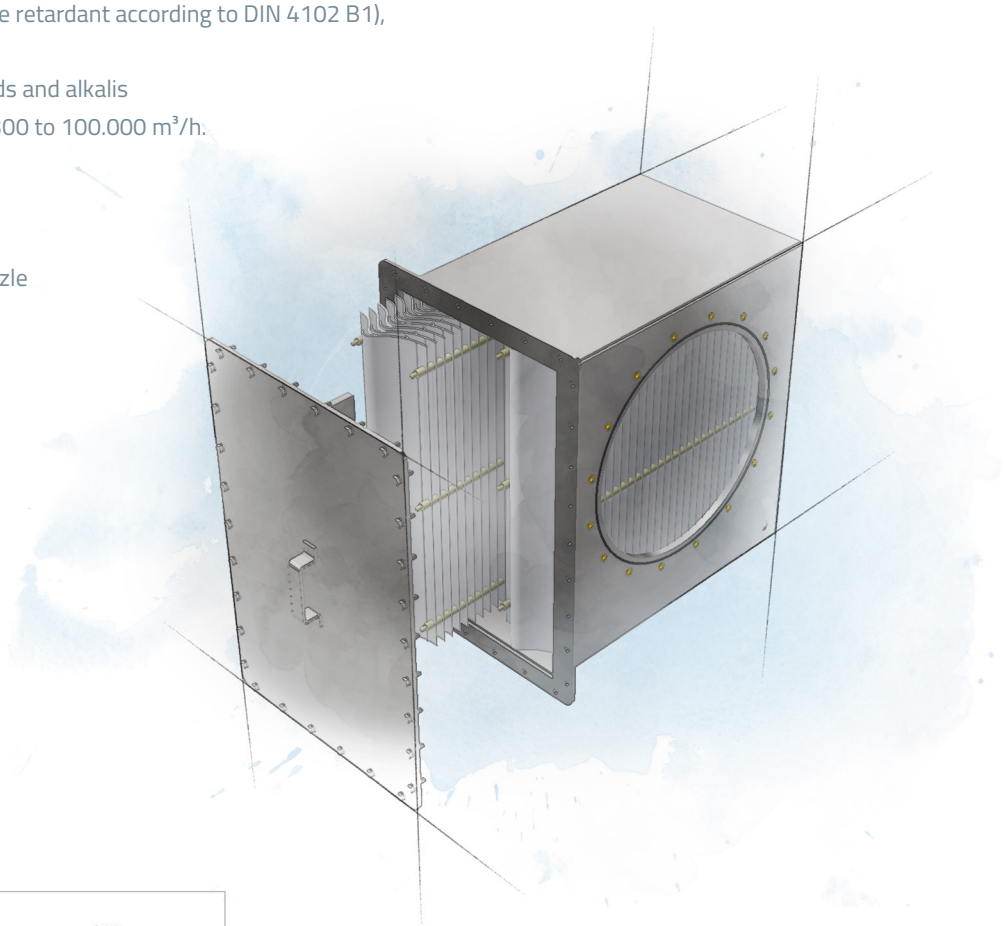

DIMENSIONS

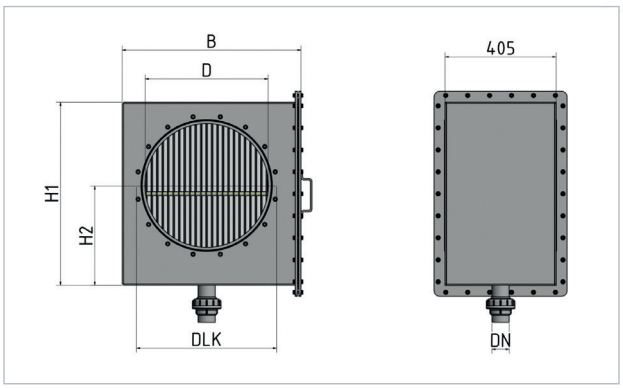

SIZE OVERVIEW

The following size overview contains three volume flow ranges for each size with the corresponding information on the degree of separation and pressure drop.

The upper volume flow value is the maximum permissible. The volume flows printed in bold represent a more economical range in relation to the degree of separation and pressure drop. 99% of all drops that are larger than the specified limit drop diameter (basic system air / water at 20°C) are separated.
Installation in horizontal pipes. Up to size 18, the flange connection is compatible with the HoKa brand.

Available as an accessory:

- Connection flange with reduction to pipe
- Connection flange with reduction and built-in spray nozzle

		DGtr 20µm	DGtr 16µm	DGtr 13µm	Dimensions								
Size	Item no.	Δp = 80Pa m^3/h	Δp = 280Pa m^3/h	Δp = 420Pa m^3/h	B mm	H1 mm	H2 mm	D mm	DLK[1] mm	n[2] M8	Dreinage DN	Weight[3] kg	Guide values for pipe connection
1	1003430F	300	**500**	650	350	375	218	160	200	8	50	14	110 / 125 / 140
2	1003432F	370	**650**	800	380	395	228	180	220	8	50	15	110 /140 / 140
3	1003433F	450	**800**	1000	400	415	138	200	240	8	50	18	125 / 140 / 160
4	1003434F	550	**1000**	1200	425	440	251	225	265	8	50	20	140 / 160 / 180
5	1003435F	700	**1200**	1600	450	465	263	250	290	12	50	22	140 / 180 / 225
6	1003436F	900	**1600**	2000	480	495	278	280	325	12	50	25	160 / 225 / 250
7	1003437F	1100	**2000**	2500	515	530	296	315	350	12	50	29	180 / 250 / 280
8	1003438F	1400	**2500**	3000	555	570	316	350	400	12	50	33	200 / 280 / 315
9	1003439F	1800	**3100**	4000	600	615	338	400	445	16	50	40	225 / 315 / 355
10	1003440F	2300	**4000**	5100	650	665	363	450	510	16	50	64	280 / 355 / 400
11	1003441F	2800	**5000**	6200	700	715	388	500	560	20	50	53	280 / 400 / 450
12	1003442F	3400	**6000**	7800	760	775	418	560	610	20	50	63	315 / 400 / 450
13	1003443F	4500	**7800**	10000	830	845	453	630	710	24	50	75	355 / 450 / 560
14	1003444F	5500	**10000**	13000	910	925	493	710	760	24	50	90	400 / 560 / 630
15	1003445F	7000	**13000**	16000	1000	1015	538	800	866	28	50	108	450 / 630 / 630
16	1003446F	9000	**16000**	20000	1100	1115	588	900	966	32	50	132	500 / 630 / 710
17	1003448F	11000	**20000**	25000	1200	1215	638	100	1066	36	50	155	560 / 710 / 800
18	1003447F	16000	**28000**	35000	1400	1415	738	1200	1270	40	2x 50	211	630 / 900 / 900
19	1003450F	22000	**38000**	50000	1600	1615	838	1400	1470	52	2x 50	275	800 / 1000 / 1200
20	1003449F	28000	**50000**	62000	1800	1815	938	1600	1670	60	2x 50	348	900 / 1200 / 1200
21	1003451F	35000	**62000**	80000	2000	2015	1038	1800	1870	64	2x 50	431	900 / 1200 / 1400
22	1003452F	45000	**80000**	100000	2200	2215	1138	2000	2070	72	2x 50	520	1000 / 1400 / 1600

DGtr Limit drop diameter **Δp** Pressure drop

[1] Up to size 18 the hole pattern is compatible with the HoKa brand. [2] Note: thread depth max. 10 mm! [3] Approximate weight for material PPs.

Technical changes reserved . EN . 01/2021

FUNKEN
Kunststoffanlagen

FUNKEN Kunststoffanlagen GmbH
Meysstraße 1
D-53773 Hennef

Phone: +49 2242 9209-0
E-mail: funken@funken.de

www.funken.de